INSTRUCTIONS FOR CAPRI TRACK

Part No. 715604101

CP109 (END CONNECTOR/POWER FEED WITH OUTLET BOX COVER, SINGLE CIRCUIT)

IMPORTANT SAFETY INSTRUCTIONS

This Track Connector is for use only with Capri Lighting's "CT" series track system. Care must be taken to see that Capri Track and all connections have been installed in accordance with their instruction sheets, and that the electrical system has been tested before installing fixtures.

DESCRIPTION: Surface mounted ceiling feed connector for electrical power supply to single circuit track system under outlet box.

Assembly:

1. Make sure power is off. Remove connector cover by removing single cover screw.
2. Attach mounting strap to outlet box.
3. Insert connector to the end of track and tighten set screw. Secure track to the ceiling.
4. Secure connector to mounting strap with provided nipple.
5. Fasten load wire to screw terminal marked "L" and neutral wire to terminal "N".
6. Fasten ground wire to green screw terminal.
7. Install cover with small pin by sliding cover into position so that pin is behind metal plate. Fasten with cover screw.

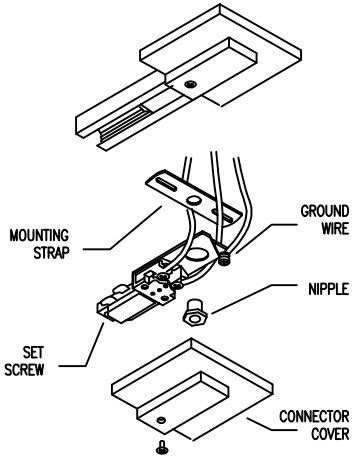

NOTE:
When installing or using Capri Track system, basic safety precautions should always be followed. Read all instructions.

WARNING: RISK OF ELECTRICAL SHOCK OR FIRE:

NEVER
- install track to any vertical surface (e.g. walls, vertical beams, columns, door frames). Fixtures may not remain secure, electrical components may be exposed, and hot fixtures may come in contact with persons or combustibles.

NEVER
- install track in wet or damp locations;
- install any part of the track system less than 5 feet above the floor;
- install any fixture assembly closer than 6 inches from any curtain or similar combustible material; or
- attempt to connect power tools, extension cords, appliances or the like to the track.

ALWAYS
- disconnect electrical power before adding to or changing the configuration of the track.

WARNING: RISK OF FIRE. FAILURE TO TIGHTEN ALL CONNECTIONS ON TRACK POWER SUPPLIES, TRACK CONNECTORS, PENDANT KITS, CANOPIES, AND ANY OTHER ELECTRICAL TRACK COMPONENT MAY RESULT IN EXCESSIVE TEMPERATURE AT THE CONNECTIONS CAUSING SPARKS AND/OR FIRE.

SAVE THESE INSTRUCTIONS

capri LIGHTING

Capri Lighting
776 South Green Street
Tupelo, MS 38804
662-842-7212
662-841-5501 fax

Canadian Division
189 Bullock Drive
Markham, Ontario L3P 1W4
905-294-9570
905-294-9811 fax