INSTRUCTIONS FOR CAPRI TRACK

Part No. 715616101

CA22
PENDANT SLOPE ADAPTER

IMPORTANT SAFETY INSTRUCTIONS

These Track accessories are for use only with Capri Lighting's "CT" series track system. Care must be taken to see that Capri Track and all connections have been installed in accordance with their instruction sheets, and that the electrical system has been tested before installing fixtures.

DESCRIPTION: Pendant slope adapter used together with CA2018, CA2048 or CA2096 suspension kits for one or two circuit Capri Track. Use when suspending track from a sloped surface.

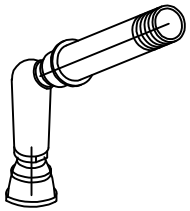

1. Trim stem to the desired length. The threaded portion of the stem must be retained.

2. Assemble support bracket A to track using #10-32 nut and screw provided.

3. Assemble suspension stems as follows: Assemble CA22, sleeves B, strap C, canopy D, cover H and nuts F to stem G as shown. The threaded end of the stem screws into the bottom of the CA22 adapter.

4. Mount swivel support stem assembly to ceiling by mounting strap C to ceiling with hardware supplied.

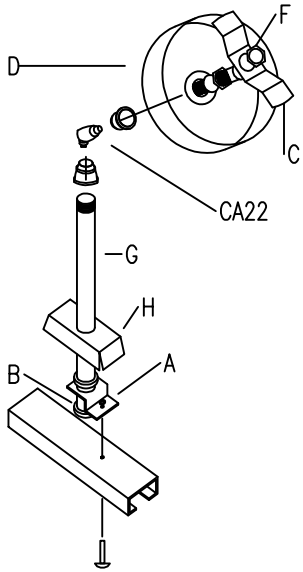

NOTE:
When installing or using Capri Track system, basic safety precautions should always be followed. Read all instructions.

WARNING: RISK OF ELECTRICAL SHOCK OR FIRE:

NEVER
- install track to any vertical surface (e.g. walls, vertical beams, columns, door frames). Fixtures may not remain secure, electrical components may be exposed, and hot fixtures may come in contact with persons or combustibles.

NEVER
- install track in wet or damp locations;
- install any part of the track system less than 5 feet above the floor;
- install any fixture assembly closer than 6 inches from any curtain or similar combustible material; or
- attempt to connect power tools, extension cords, appliances or the like to the track.

ALWAYS
- disconnect electrical power before adding to or changing the configuration of the track.

WARNING: RISK OF FIRE. FAILURE TO TIGHTEN ALL CONNECTIONS ON TRACK POWER SUPPLIES, TRACK CONNECTORS, PENDANT KITS, CANOPIES, AND ANY OTHER ELECTRICAL TRACK COMPONENT MAY RESULT IN EXCESSIVE TEMPERATURE AT THE CONNECTIONS CAUSING SPARKS AND/OR FIRE.

SAVE THESE INSTRUCTIONS

capri
LIGHTING

Capri Lighting
776 South Green Street
Tupelo, MS 38804
662-842-7212
662-841-5501 fax

Canadian Division
189 Bullock Drive
Markham, Ontario L3P 1W4
905-294-9570
905-294-9811 fax